WILLBERT
BY EUROLOOP

WILLBERT Amber I

The next generation DC charger for electric vehicles

- Industry **best efficiency of 97%** thanks to Silicon Carbide components
- **25 - 150 kW modular standalone** systems
- Industry leading Power to Volume ratio
- Possibility to charge two cars at the same with customer specified combination of charging protocols
- Dynamic Power Allocation of 25 kW Power Modules between two charging plugs
- Reliable, forced-air cooling system, plus completely sealed of power electronics against dust and dirt particles
- Attractive and functional design enhancing customer brand recognition

WILLBERT
BY EUROLOOP

Illuminated Client's brand Design

High resolution touch-panel with customizable GUI

CCS/CHAdeMO standards

Dynamic Power Allocation

Ergonomic and user-friendly design

Customizable dynamic LED illumination system

RFID authentication system

Elegant and durable design using tempered glass

The most efficient power conversion 97%

Reduces the energy losses and brings savings to the operator

WILLBERT Amber I

Thanks to the feature complete standalone architecture charger does not require any additional equipment.

Its best in class Power to Volume ratio allows you to install more in less space.

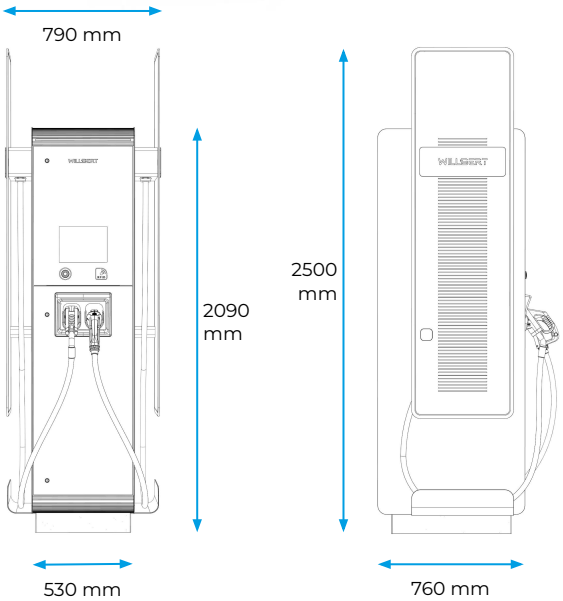

DESIGN OF THE YEAR
GOOD DESIGN
2020

WILLBERT
BY EUROLOOP

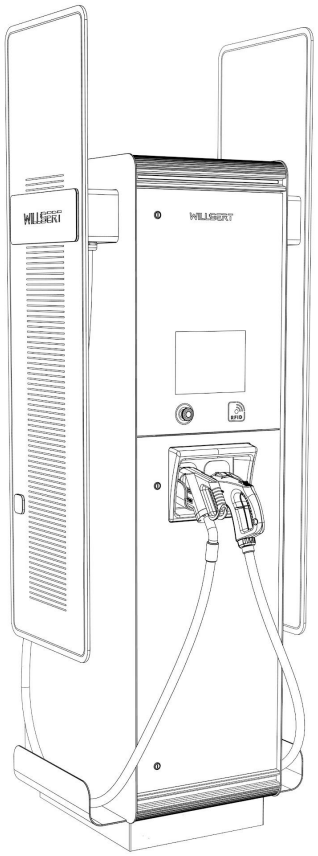

AVAILABLE CONFIGURATIONS

Rated Power					
25 kW	50 kW	75 kW	100 kW	125 kW	150 kW

Charging Cables and Standards Configuration		
1	CCS 250 A	CCS 250 A
2	CCS 300 A+	CCS 250 A
3	CCS 300 A+	CCS 300 A+
4	CCS 500 A	CCS 250 A
5	CCS 500 A	CCS 300 A+
6	CCS 250 A	CHAdeMO 125 A
7	CCS 300 A+	CHAdeMO 125 A
8	CCS 500 A	CHAdeMO 125 A

Example product code:

If you want to order a 150 kW charger with the 500 A CCS and 125 A CHAdeMO cables - its code will look as follows: **WB-AMB-I.150-8**

Extensions product codes	
WB-AMB-PM	25 kW expansion power module*
WB-AMB-CCT	Credit Card Terminal
WB-AMB-RFID	RFID cards reader

* Allows flexible extension of the power of the charger up to 150 kW as a plug-and-play solution.

WILLBERT Amber I

UNRIVALLED EFFICIENCY

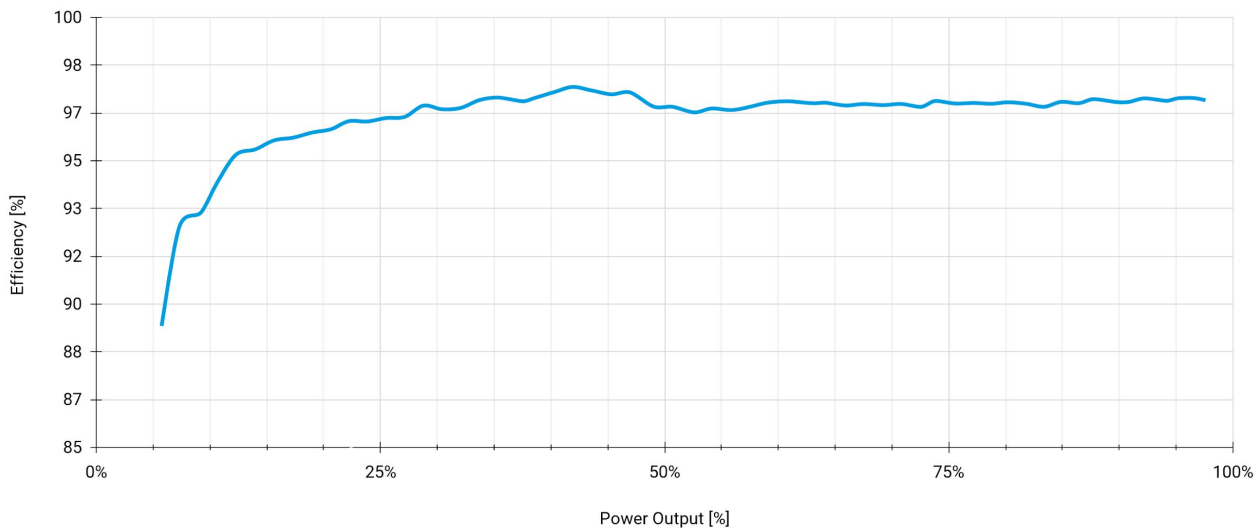

Thanks to silicon carbide switching technology 97% of the energy being converted goes to the car battery.

WILLBERT BY EUROLOOP

WILLBERT Amber I DATASHEET

Input	
AC Connection	3P + N + PE
AC Voltage	400 VAC +/- 10%
Frequency	50-60 Hz
Nominal Current	250 A max
Efficiency	97 %
Power Factor	0.99
Output	
DC Output Voltage Range	200 - 500 V 200 - 920 V (optional)*
Maximum Charging Current	375 A
Maximum Charging Power	150 kW
CCS Cable and Connector Rating Options	250 A, 300 A** , 500 A
CCS Compliance	IEC 61851-23 / -24, IEC 62196-3, DIN 70121
CHAdeMO Cable and Connector Rating	125 A
CHAdeMO Compliance	IEC 61851-23 / -24, JEVS G 105, Rev. 1.2 compliant
Cables Length	3.5 m each
Protection	Overcurrent protection, Overvoltage protection, Short circuit protection, Residual current protection, Undervoltage protection, Insulation monitoring, Ground fault protection
User Interface and Control	
Display	12'' colour display with touch screen
Push Button	1 Emergency stop button
Local Authentication	RFID (optional)
Payments	Credit Card Terminal (optional)
Network Interface	Ethernet, Cellular (3G, 4G), Wi-Fi
Communication Protocol	OCPP 1.6
General	
Operating Temperature	-25°C to +50°C
Storage Temperature	-40°C to +80°C
Humidity	< 95% relative humidity, non condensing
Ingress Protection	IP54
Enclosure Protection	IK10
Weight	520 kg
Cooling	Forced air
Compliance	Low Voltage Directive 2014/35/EU, IEC 61851-1, IEC 61851-23, IEC 61439-7

* In high-voltage mode charger has a granularity of 50 kW instead of 25 kW
** 300 A+ CCS cable can exceed rated current for a limited period of time depending on ambient temperature